DATA SHEET

LH-100 LED

Colour	Product No.
Stainless steel / satin glass	1545164

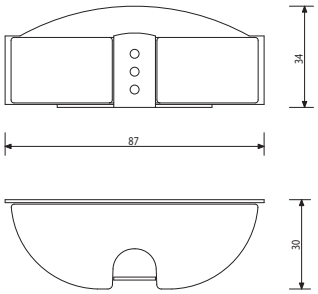

Product No.	Power	lm	K	CRI	IP	Size
1545164	1 W / 350 mA	35	3000	> 85	67	H 34 x W 87 x D 34 mm

NB ! LH-100 LED equipped with a 5 m connection cable.

RECOMMENDED TRANSFORMER SETS:

Transformer	Product No.	Dimmer	Min lamps	Max lamps
Osram OTe 9/220-240/350 PC	1532264	*	5	9
Osram OTe 15/220-240/350 PC	1532265	*	9	15
Osram OTe 20/220-240/350 PC	1532266	*	15	18
Osram OT 9/220-240/350 DIM	1532268	1 - 10 V	1	7

* Leading and Trailing Edge Dimmer

Cariitti Oy
www.cariitti.com

Munkinmäentie 9
02400 Kirkkonummi
Finland

Subject to change.

DATA SHEET

1

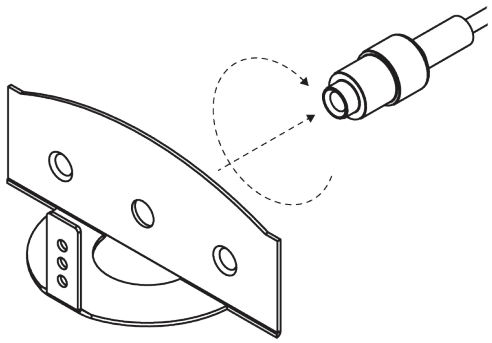

2

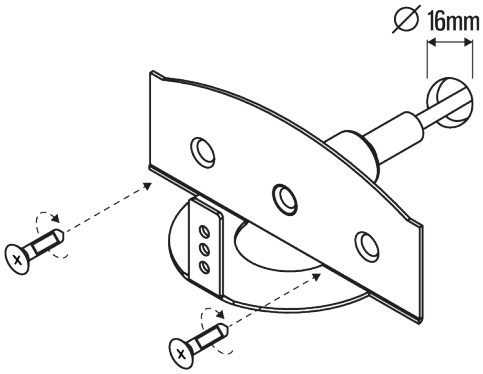

3

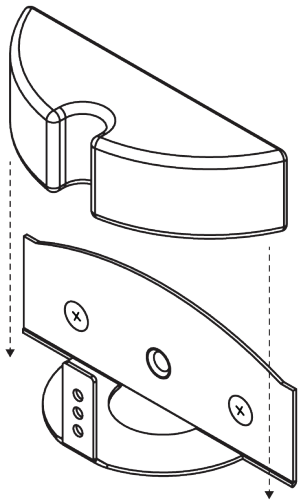

4

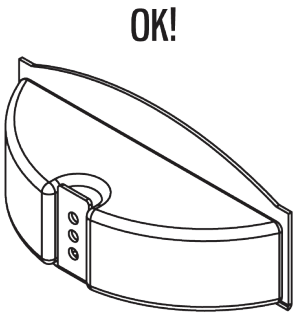

NB ! LH-100 LED equipped with a 5 m connection cable.

Cariitti Oy
www.cariitti.com

Munkinmäentie 9
02400 Kirkkonummi
Finland

Subject to change.

DATA SHEET

1532264

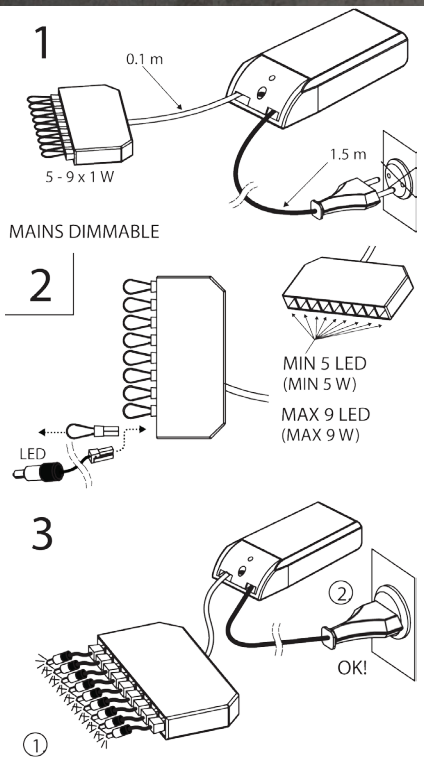

1532265

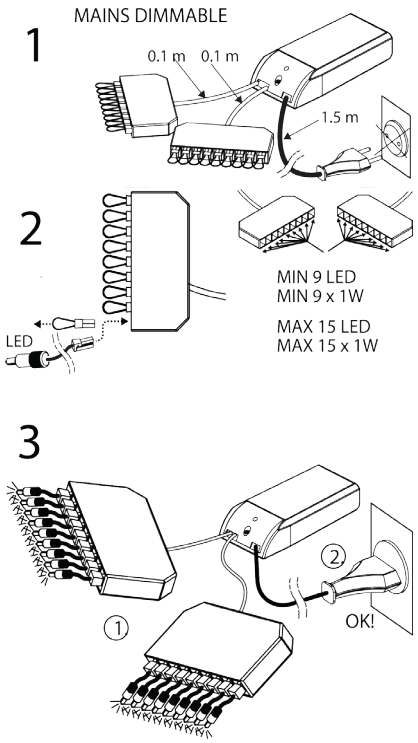

1532266

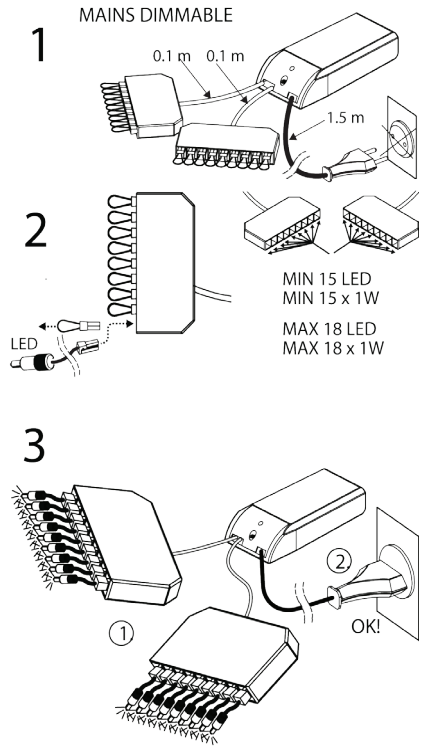

1532268

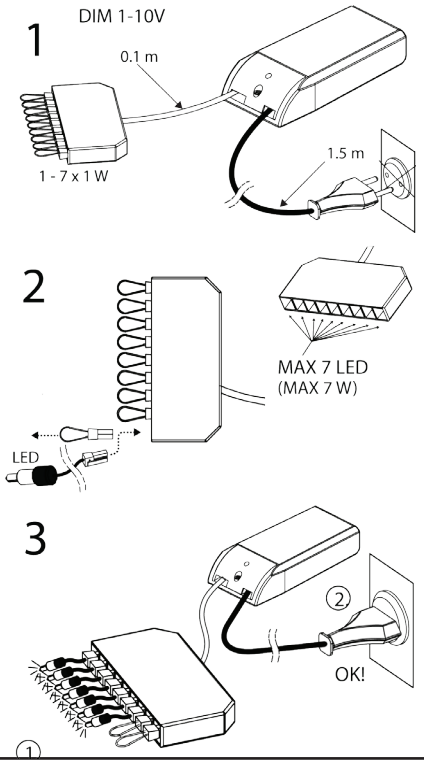

Cariitti Oy
www.cariitti.com

Munkinmäentie 9
02400 Kirkkonummi
Finland

Subject to change.